MagnaShade®

Small Profile. Big Solution.

Key features:

- A patented floating-mounting system centers the shadecloth tube at all times. The configuration minimizes tube deflection, and maximizes shadecloth flatness.
- The unique shallow profile—high and wide—can be up to approximately 40 ft. (12m) wide by 20 ft. (6m) high.

Simplified installation

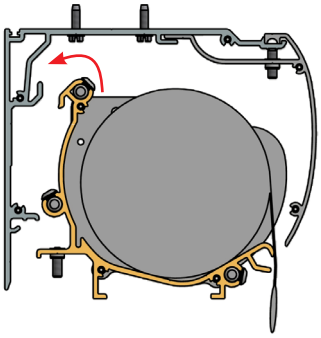

2. The pre-fabricated cradle is hooked onto the top inside of the cassette.

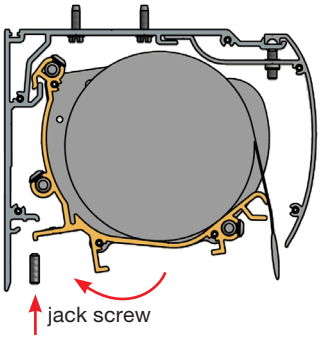

3. Then lower the cradle into place and secure it along the span with jack screws.

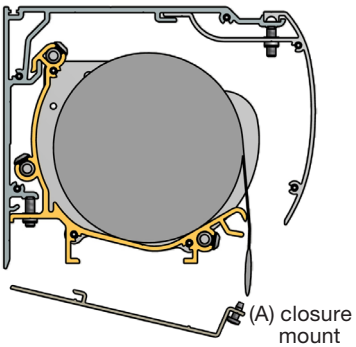

4. Hook (A) the closure mount into the bottom of the cradle and then secure along the span with screws.

1. The housing-cassette is attached to a ceiling or wall.

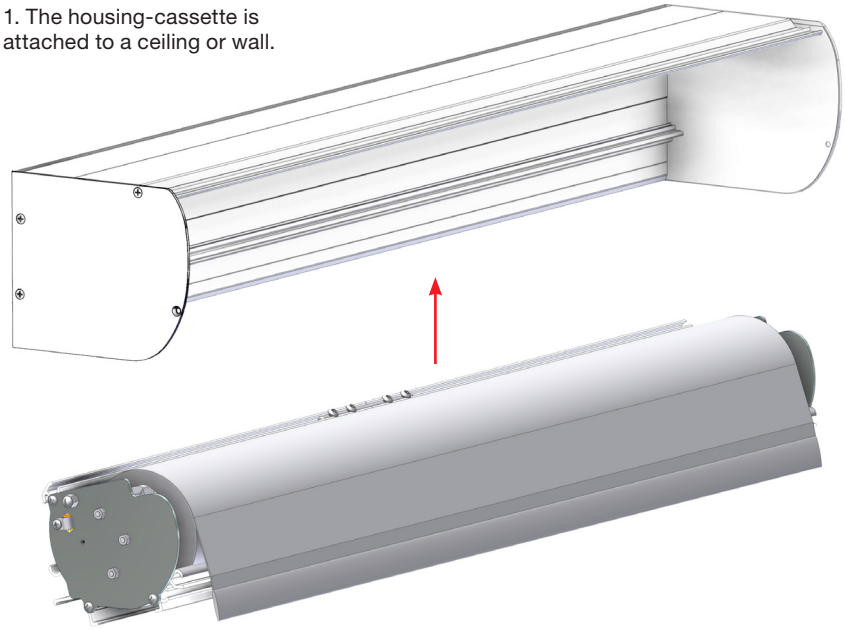

The cradle assembly eliminates field assembly. Drop the cradle inside the pocket.

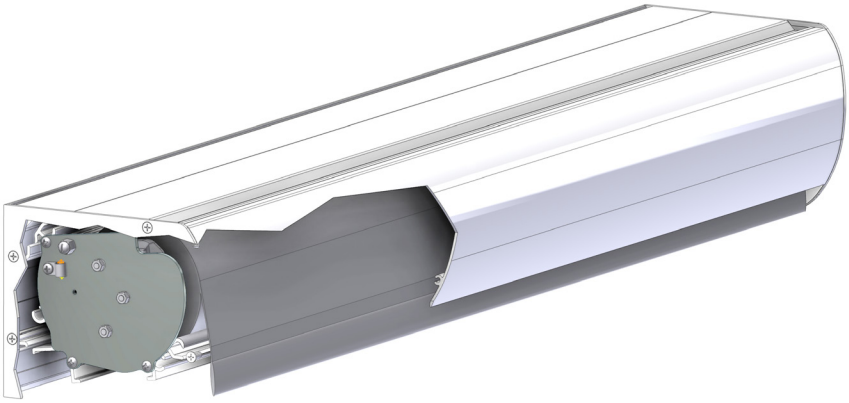

Over

MagnaShade®

Small Profile. Big Solution.

Shadecloth options	Max. width	Max. height
0800 Series Blackout	40 ft. (12.2m)	20 ft. (6.1m)
1300 Series	40 ft. (12.2m)	20 ft. (6.1m)
6000 Series	40 ft. (12.2m)	20 ft. (6.1m)

Dimensions

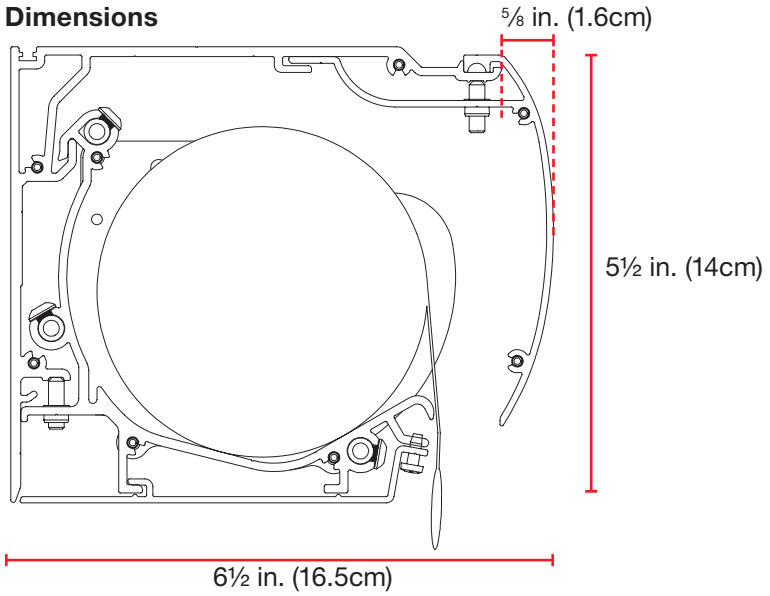

MechoSystems
Design with light.®

MechoSystems
Corporate Headquarters
42-03 35th Street
Long Island City, NY 11101

T: +1 (718) 729-2020
F: +1 (718) 729-2941
E: info@mechosystems.com
W: mechosystems.com

© 2013 MechoShade Systems, Inc. All rights reserved. All trademarks herein are owned by MechoShade Systems, Inc. No part of this document may be reproduced or otherwise used without the express written consent of MechoShade Systems, Inc.

L10208.0713 rev 5